210131-PD

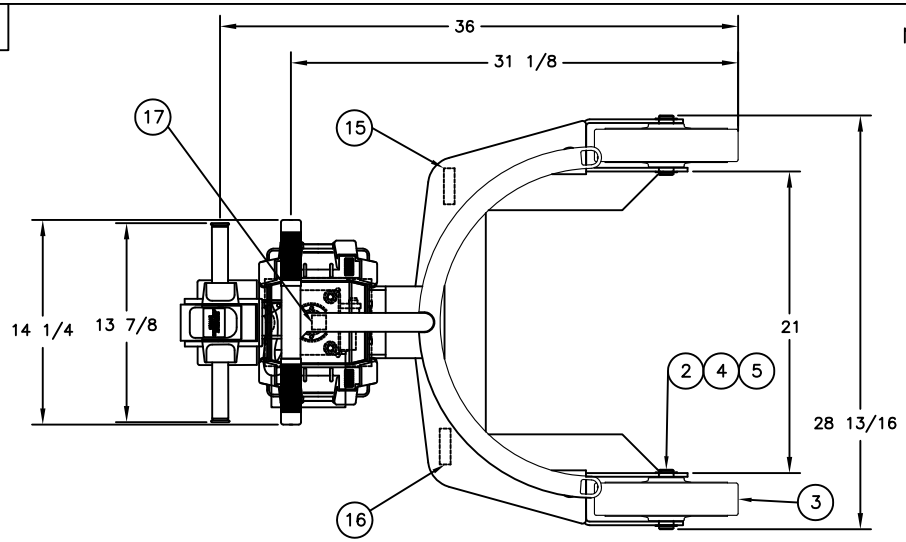

NOTES:

CAPACITY: 1000 LBS

WHEELS: 10" X 2 1/2" POLY ON POLY

- 34" LG SECURING CHANGE
- FOR 20" DIAMETER LIQUID CYLINDERS
- POWERED 5TH WHEEL HAS INTEGRATED BRAKING SYSTEM, RELEASE BUTTERFLY SWITCH OR PUSH TO VERTICAL TO STOP.
- DURABLE POWDER COATED FINISH
- COLOR ORANGE

BILL OF MATERIAL

ITEM	PART NO.	DESCRIPTION	QTY.
1	056600	WELDMENT: FRAME LCC	1
2	053933	AXLE: 1" FRONT WHEEL	2
3	053730	WHEEL: 10" x 2-1/2"	2
4	108208	WASHER: FLAT (PLTD) 1"	4
5	109363	RING:RETAINING 1" SHAFT	4
6	055071	POWER DRIVE UNIT, 210131	1
7	100642	NUT, HEX, 3/8-16, PLATED	4
8	100217	LOCKWASHER, 3/8" PLATED	4
9	109634	FLATWASHER, 3/8" PLATED	4
10	108154	SCR: HEX HD CAP (PLTD) 3/8-16x2"	4
11	109421	CARABINER:1/4"DIA PLTD	1
12	109422	CONNECTOR: CHAIN	1
13	109423	CONNECTOR:SPRING SNAP	1
14	053932	CHAIN:SECURING, 34" LG	1
15	154009	LABEL: WESCO (7/8"X4")	2
16	150368	LABEL: CAPACITY-1000#	1
17	154087	LABEL: MADE IN U.S.A	1
18	109364	HANDGRIP: BLACK IND	2
19	055527	BATTERY MOUNT BRACKET WELDMENT	1
20	055568	BATTERY BOX:GROUP U1, THERMOPLASTIC, BLACK	1
21	109307	BATTERY: 12 VDC, 18 Ah, OUTPUT, ES17-12 MK	1
22	109311	BATTERY CHARGER:12 VDC, 1.5 OUTPUT, 120 VAC INPUT	2
23	108169	BOLT: CARRIAGE (PLTD) 5/16-18X1"	4
24	100170	WASHER:LOCK(PLTD)5/16	4
25	108175	NUT:HEX(PLTD) 5/16-18	4
26	109310	TERMINAL: RING TONGUE 12-10AWG/#10 STUD	2
27	052749	CORD REEL, CHARGER	1
28	055578	BATTERY METER	1

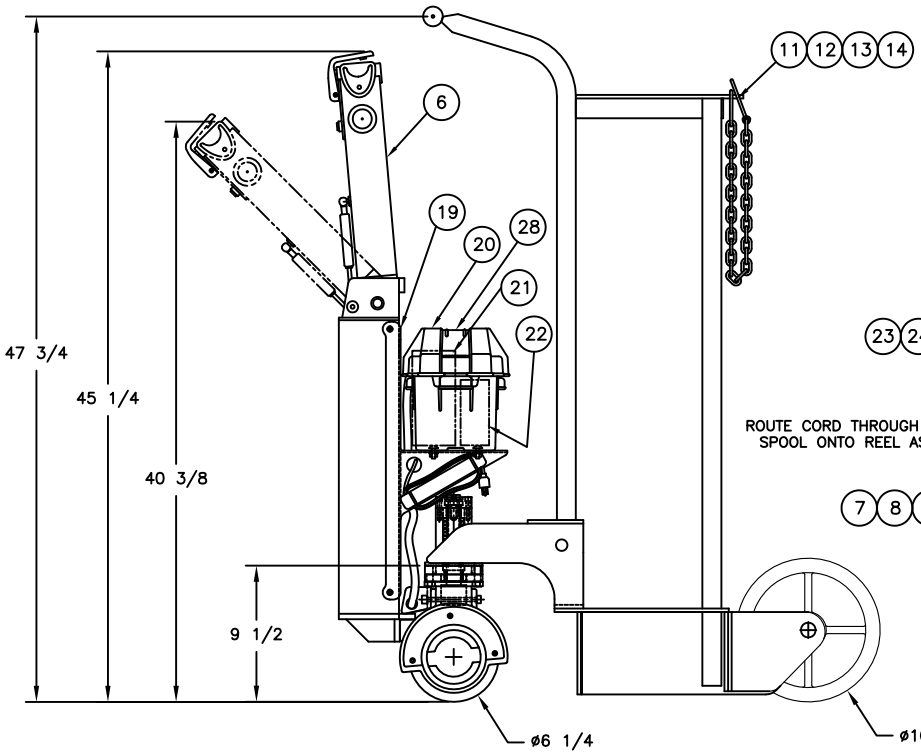

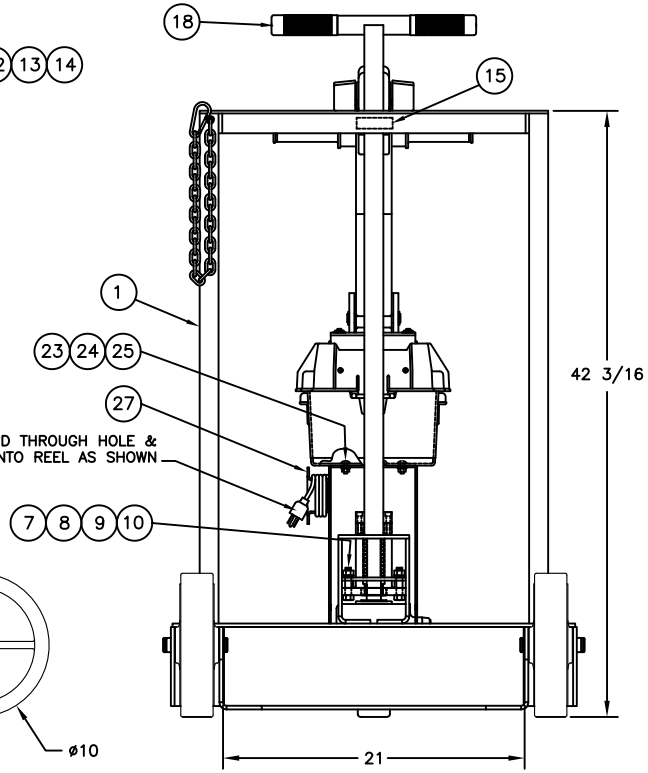

DETAIL A: ELECTRICAL ROUTING for 12 VDC SYSTEM

CONNECTION INSTRUCTIONS

1. CONNECT BOTH RED LEADS TO THE POSITIVE POST OF BATTERY.
2. CONNECT BOTH BLACK LEADS TO THE NEGATIVE POST OF BATTERY.

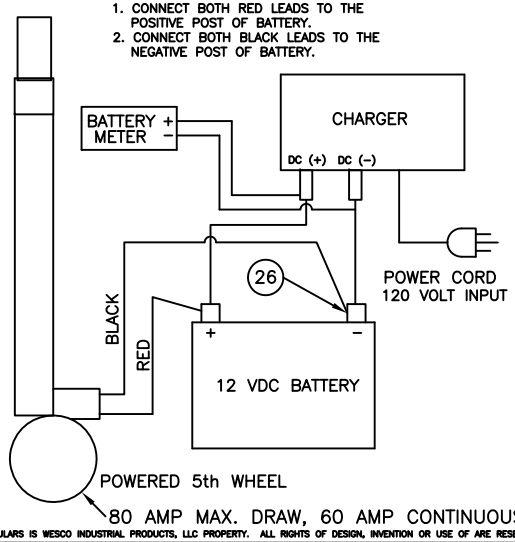

THIS DRAWING IN ALL PARTICULARS IS WESCO INDUSTRIAL PRODUCTS, LLC PROPERTY. ALL RIGHTS OF DESIGN, INVENTION OR USE OF ARE RESERVED.

PRINT ISSUED

APR 09 2018

WESCO MANUFACTURING ENGINEERING DEPARTMENT

REV.	ECN & DATE	APP.
A	7360 04-09-18 RELEASED FOR PRODUCTION	JL

REVISIONS

WESCO INDUSTRIAL PRODUCTS, LLC
NORTH WALES PENNA. 19454

PART NAME: LIQUID CYL. CART SHOWN w/ OPTIONAL POWERED 5TH WHEEL

TOLERANCE UNLESS OTHERWISE SPECIFIED

FRACTION	3 PLACE DECIMAL	2 PLACE DECIMAL
± 1/64	± .005	± .01

ANGULAR ± 1-1/2° SHEET 1 OF 1

BREAK ALL SHARP EDGES AND REMOVE ALL BURRS

DRAWN: JL 04-09-18
CHECKED:
APP. ENGR.
SCALE: 1" = 1"

210131-PD REV A